HUADE AMÉRICA

Catálogo de Produtos

Fixed Displacement Vane Pumps - PVV / PVQ

Fixed displacement vane pumps

Types PVV and PVQ

Nominal sizes 18 to 193
Series 1X
Maximum operating pressure 210 bar
Maximum displacement 18 to 193 cm^3

Features

- Fixed displacement
- Long bearing life due to hydraulically unloaded shaft
- Low wear due hydraulically unloaded vanes
- Low operating noise
- Easy to service due to exchangable pump cartridges
- Good efficiency
- Optional positioning of the pressure connection
- Clockwise or anti-clockwise direction of rotation
- Drive shaft optionally; cylinderical or splined

Double pump:

- Very compact design
- The position of the pressure connections can be individually selected

Function, section

The PVV and PVQ hydraulic pumps are fixed displacement vane pumps.

The rotor (2) is fitted onto the splines of the drive shaft (1) which rotates inside the stator ring (3). The vanes (4) are fitted into slots in the rotor and are pressed onto the inner surface of the stator ring by centrifugal force as the rotor turns. The displacement chambers are sealed on the sides by the control plates (5). Due to the double extentric form of the stator ring there are two pressure and two suction chambers opposite to each other. The drive shaft is thereby hydraulically unloaded. It only has to carry the torque forces. The vanes are partially unloaded as they pass through the suction areas. This unloading results in reduction in wear and makes it possible to obtain a high efficiency.

By simply removing the cover (6) it is possible to remove the pump cartridge (comprising of rotor, vanes, stator ring and control plates) without having to remove the housing (7) from the pump mounting bracket. This makes it possible to quickly repair and maintain the pump.

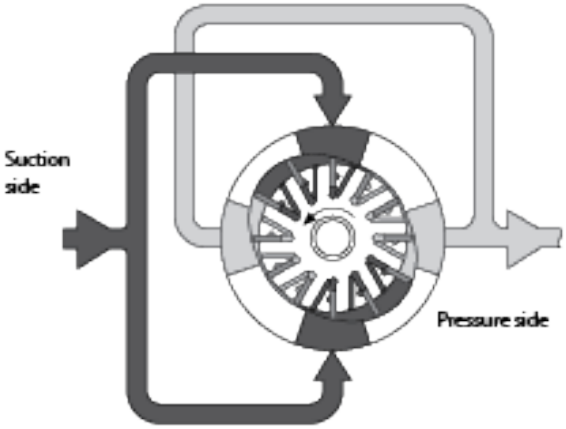

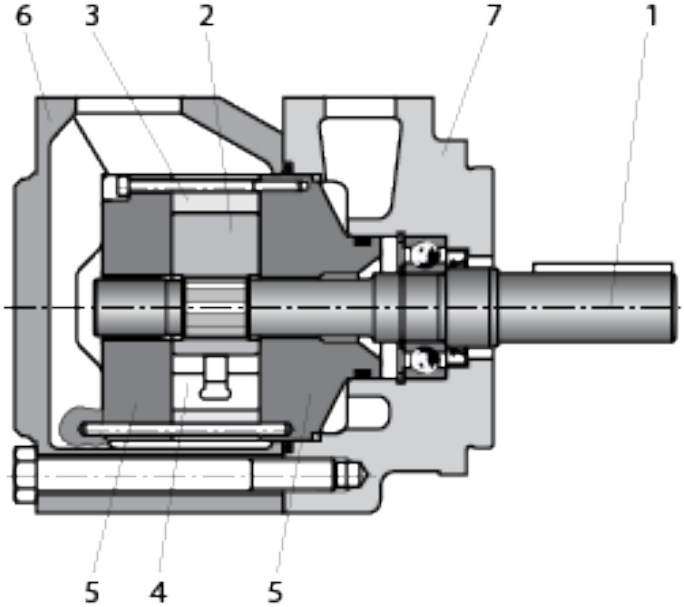

Type PVV..-1X/...A15D...

The design of the type PVQ pump makes it particularly suitable for mobile applications.

The special design of the control plates makes it possible to compensate for the heat expansion of the rotor and to act against sudden pressure changes. Due to the division of the control plates (7) into flexible discs and the cover plates (8), counter pressure chambers (9) are created that are balanced against the pressures that are in the displacement chambers. Due to this, the optimum clearance between the rotor and the flexible discs is guaranteed and thus the best volumetric efficiency is made possible.

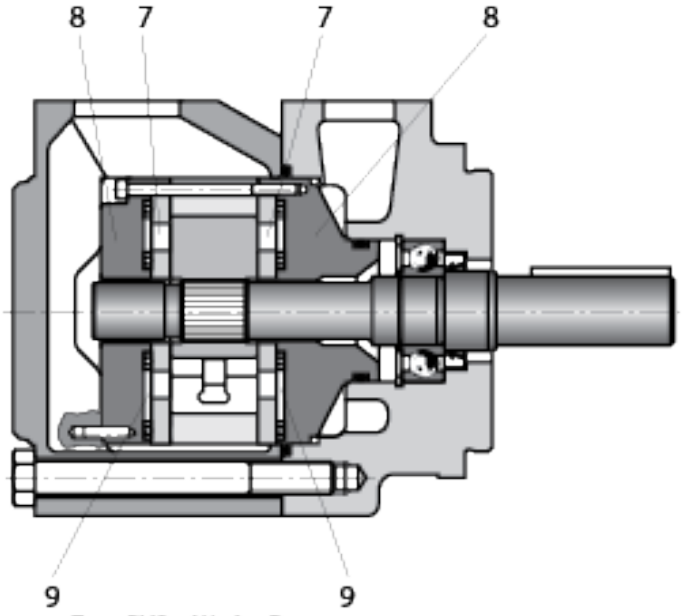

Type PVQ..1X/...A15D...

Function, section

The PVV and PVQ double pumps are created by fitting a scond pump cartridge onto a mutual shaft. The oil inlet is via a common suction connection in the centre housing (10). The oil outputs is separate via the pump cartridge. The pressure connection for the front pump cartridge is in the flange housing and for the rear pump cartridge in the cover plate.

The largest pump cartridge is always fitted at the flange housing end. It is not possible to have identically sized pump cartridges as a double pump.

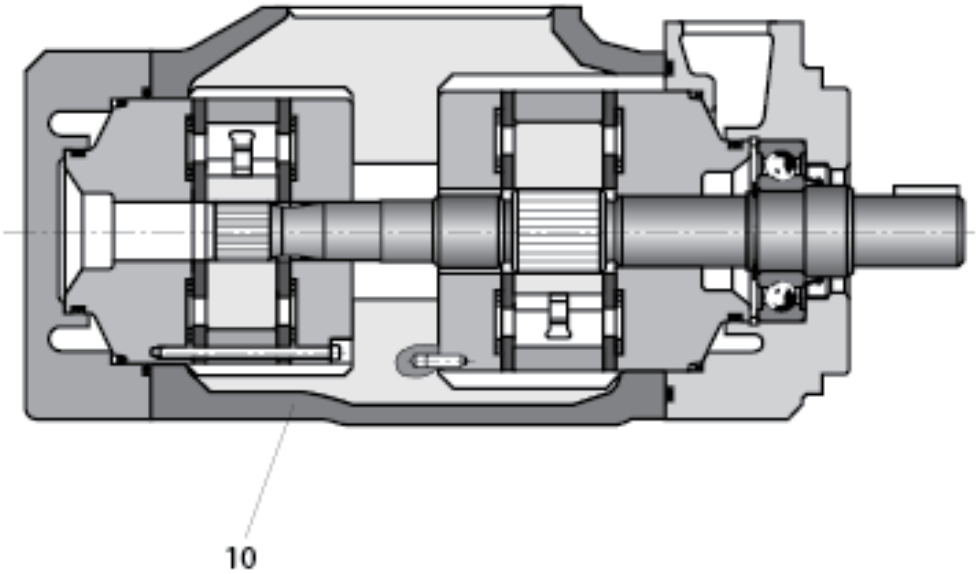

Symbols

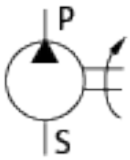

Single pump

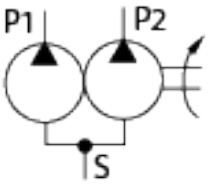

Double pump

Huade Ordering details

PV		–1X /			15						*

Pump type

Industrial version = V
Mobile version = Q

Build size
See table on page 5
(e.g. single pump = 2
Double pump = 52)

Component series = 1X
Component series 10 to 19 (10 to 19, unchanged installation and connection dimensions)

Displacement flow
See table on page 5
(e.g. 55.2 cm ^{3} = 055)

Direction of rotation (viewed on the shaft end)
Clockwise = R
Anti-clockwise = L

Shaft end
Cylindrical drive shaft (standard) = A [1]
Cylinderical drive shaft (strengthened version) only BS2 to BS54 = B
Splined drive shaft = J

Connections
SAE suction and pressure connections, UNC fixing screws = 15

Position of the pressure connection on the flange (when viewed on the cover)
Top (0° from the inlet) = D
Right (90° to the right of the inlet) = R
Left (90° to the left of the inlet) = L
Bottom (180° from the inlet) = U

Only for double pumps
Pressue connection location on the cover (viewed on the cover)

BS 21 to 52:
D = Top (45° to the right of the inlet)
R = Right (135° to the right of the inlet)
L = Left (45° to the left of the inlet)
U = Bottom (135° to the left of the inlet)

BS 54:
D = Top (0° from the inlet)
R = Right (90° to the right of the inlet)
L = Left (90° to the left of the inlet)
U = Bottom (180° from the inlet)

Seal material
M = NBR seals
V = FKM seals

Flange version
B = 101-2 (SAE-B); (BS1; 2; 21)
C = 127-2 (SAE-C); (BS4; 5 and BS41 to 54)

Through drive
No code = Without through drive
K01 = 82-2,16-4 (SAE-A, 9T)
K02 = 101-2,22-4 (SAE-B, 13T)
K07 = 127-2,32-4 (SAE-C, 14T)

Further details in clear text

Ordering example

Single pump: Industrial version (also in mobile version)
PVV 2-1X/055RA15DMB

Doble pump: Mobile version (also in industrial version)
PVQ 52-1X/154-068RB15DDMC

[1] Not available for through drive pumps

Huade Ordering details (build size, displacement flows)

Single pumps	
Build size	Displacement flows
1	18,0 cm ^{3} = 018 27,4 cm ^{3} = 027 36,4 cm ^{3} = 036 39,5 cm ^{3} = 040 45,9 cm ^{3} = 046
2	40,1 cm ^{3} = 040 45,4 cm ^{3} = 045 55,2 cm ^{3} = 055 60,0 cm ^{3} = 060 67,5 cm ^{3} = 068
4	69,0 cm ^{3} = 069 81,6 cm ^{3} = 082 97,7 cm ^{3} = 098 112,7 cm ^{3} = 113 121,6 cm ^{3} = 122
5	138,6 cm ^{3} = 139 153,5 cm ^{3} = 154 162,2 cm ^{3} = 162 183,4 cm ^{3} = 183 193,4 cm ^{3} = 193

Double pumps		
Build size	Flange side	Cover side
	Displacement flows	
21	40,1 cm ^{3} = 040 45,4 cm ^{3} = 045 55,2 cm ^{3} = 055 60,0 cm ^{3} = 060 67,5 cm ^{3} = 068	18,0 cm ^{3} = 018 27,4 cm ^{3} = 027 36,4 cm ^{3} = 036 39,5 cm ^{3} = 040 45,9 cm ^{3} = 046
41	69,0 cm ^{3} = 069 81,6 cm ^{3} = 082 97,7 cm ^{3} = 098 112,7 cm ^{3} = 113 121,6 cm ^{3} = 122	18,0 cm ^{3} = 018 27,4 cm ^{3} = 027 36,4 cm ^{3} = 036 39,5 cm ^{3} = 040 45,9 cm ^{3} = 046
42	69,0 cm ^{3} = 069 81,6 cm ^{3} = 082 97,7 cm ^{3} = 098 112,7 cm ^{3} = 113 121,6 cm ^{3} = 122	40,1 cm ^{3} = 040 45,4 cm ^{3} = 045 55,2 cm ^{3} = 055 60,0 cm ^{3} = 060 67,5 cm ^{3} = 068
51	138,6 cm ^{3} = 139 153,5 cm ^{3} = 154 162,2 cm ^{3} = 162 183,4 cm ^{3} = 183 193,4 cm ^{3} = 193	18,0 cm ^{3} = 018 27,4 cm ^{3} = 027 36,4 cm ^{3} = 036 39,5 cm ^{3} = 040 45,9 cm ^{3} = 046
52	138,6 cm ^{3} = 139 153,5 cm ^{3} = 154 162,2 cm ^{3} = 162 183,4 cm ^{3} = 183 193,4 cm ^{3} = 193	40,1 cm ^{3} = 040 45,4 cm ^{3} = 045 55,2 cm ^{3} = 055 60,0 cm ^{3} = 060 67,5 cm ^{3} = 068
54	138,6 cm ^{3} = 139 153,5 cm ^{3} = 154 162,2 cm ^{3} = 162 183,4 cm ^{3} = 183 193,4 cm ^{3} = 193	69,0 cm ^{3} = 069 81,6 cm ^{3} = 082 97,7 cm ^{3} = 098 112,7 cm ^{3} = 113 121,6 cm ^{3} = 122

Single pumps with through drive	
Build size	Displacement flows
2	40,1 cm ^{3} = 040 45,4 cm ^{3} = 045 55,2 cm ^{3} = 055 60,0 cm ^{3} = 060 67,5 cm ^{3} = 068
4	69,0 cm ^{3} = 069 81,6 cm ^{3} = 082 97,7 cm ^{3} = 098 112,7 cm ^{3} = 113 121,6 cm ^{3} = 122
5	138,6 cm ^{3} = 139 153,5 cm ^{3} = 154 162,2 cm ^{3} = 162 183,4 cm ^{3} = 183 193,4 cm ^{3} = 193

Technical data

General

Mounting style	Flange mounting to SAE J744
Pipe connections	SAE flange version (fixing threads: UNC)
Direction of rotation	Clockwise or anti-clockwise
Direction of flow	Inlet and outlet are independent of the direction of rotation
Installation	Optional, inlet connection preferably at the top
Drive	Direct, co-axial drive; radial and axial forces cannot be taken up

Weight	BS	1	2	2K	4	4K	5	5K	21	41	42	51	52	54
	kg	12	14,8	19,4	23	28,7	34	38,1	20	34	34,5	43	46	54

Hydraulic

Build sizes 1 and 2 (pump cartridge)			BS 1					BS 2				
Nominal size (≈ V in cm³)		NS	18	27	36	40	46	40	45	55	60	68
Max. flow at n = 1500 min⁻¹, p = 0,7 bar and ν = 25 mm²/s	q_v	l/min	26	39	53	59	70	59	66	80	89	100
Operating pressure, absolute								When using fluids containing water and phosphate ester min. 0,9 bar				
Inlet	$p_{min-max}$	bar	0.83 to 2.4 (recommended: 1..1.35)									
Outlet continuous for PVV	p_{max}	bar	210	210	210	160	140	175	175	175	175	175
Outlet continuous for PVQ	p_{max}	bar	210	210	210	160	140	210	210	210	210	210
Peak	p_{max}		A max. of 10% continuous output pressure; not longer than 0.5 seconds									
RPM	n_{min}	min⁻¹	600					600				
*) At 1 bar	n_{max} bei PVV	min⁻¹ *)	1800					1800				
Inlet pressure	n_{max} bei PVQ	min⁻¹ *)	2700					2700		2500		
Min. drive power required at Δp ≈ 0 bar, n ≈ 1.450 min⁻¹		kW	1.1	1.5	2,2					3		4
Pressure fluid For use with the above stated operating data			HLP mineral oil to DIN 51524 part 2									
Only with FKM seals („V")	Perm. p_{max}	bar	210	210	210	160	140	175	175	175	175	175
Phosphate ester (HFD-R)	Perm. n_{max}	min⁻¹	1200									

Build sizes 4 and 5 (pump cartridge)			BS 4					BS 5				
Nominal sizes (≈ V in cm³)		NS	69	82	98	113	122	139	154	162	183	193
Max. flow at n = 1500 min⁻¹, p = 0,7 bar and ν = 25 mm²/s	q_v	l/min	101	120	141	167	177	203	223	234	267	285
Operating pressure, absolute								When using fluids containing water and phosphate ester min. 0,9 bar				
Inlet	$p_{min-max}$	bar	0.83 to 2.4 (recommended: 1..1,35)									
Outlet continuous for PVV	p_{max}	bar	175	175	175	175	175	175	175	175	175	175
Outlet continuous for PVQ	p_{max}	bar	210	210	210	210	210	175	175	175	175	175
Peak	p_{max}		A max. of 10% continuous output pressure; not longer than 0.5 seconds									
RPM	n_{min}	min⁻¹	600					600				
*) At 1 bar	n_{max} bei PVV	min⁻¹ *)	1800					1800				
Inlet pressure	n_{max} bei PVV	min⁻¹ *)	2500			2400		2200				
Min. drive power required At Δp ≈ 0 bar, n ≈ 1.450 min⁻¹		kW	4		5.5		7.5			11		

Hydraulic

Build sizes 4 and 5 (pump cartridge)			BS4					BS5				
Pressure fluid For use with the operating data shown on page 7			HLP mineral oil DIN 51524 part 2									
Only with FKM seals („V")	Perm. p_{max}	bar	175	175	175	175	175	175	175	175	175	175
Phosphate ester (HFD-R)	Perm. n_{max}	min^{-1}	1200									
Pressure fluid temperature range		°C	– 10 to +70. (recommended: +30 to +60) Take into account the permissible viscosity range									
Viscosity range		mm^2/s	13 to 860 (recommended: 13 to 54)									
Max. permissible degree of pressure fluid contamination Cleanliness class to ISO 4406 (E) /(c)			Class 20/18/15 [1]									
Alternative pressure fluids			HFB					HFC				
Max. permissible operating pressure		bar	70					140				
			Only in conjunction with a return filter with a retention rate of $\beta_{10} \geq 100$ or more. The permissible pressure fluid temperature range is + 15 °C to +50 °C. Maximum permissible RPM: 1200 min^{-1}									
Please consult us before using our fixed displacement vane pumps with these pressure fluids!												

[1] The cleanliness class stated for the components must be adhered to in hydraulic systems. Effective filtration prevents faults from occurring and at the same time increases the component service life.

On pages 6 and 7 the stated values for the maximum RPM are valid for an absolute pressue of 1 bar at the inlet.

The maximum permissible RPM has to be corrected in accordance with the following diagrams in relation to the absolute pressure present at the inlet.

PVV/PVQ

BS1; BS2; BS4; BS21; BS41; BS42

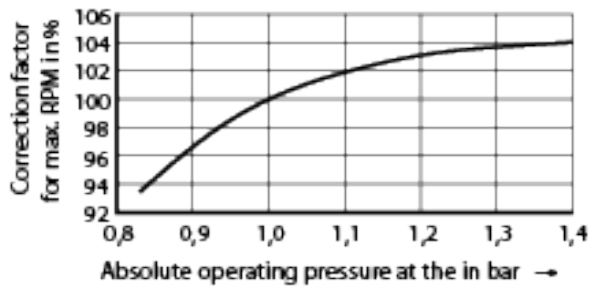

BS5; BS51; BS52; BS54

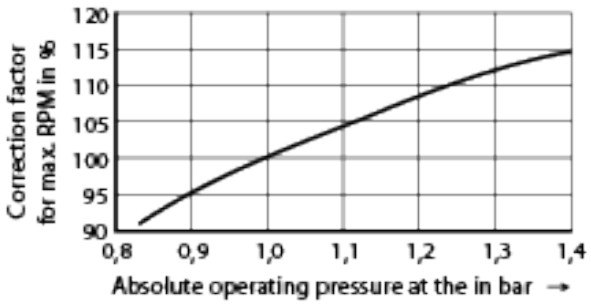

Drive torque (measured with $\nu = 41\ mm^2/s$; $\vartheta = 50\ °C$)

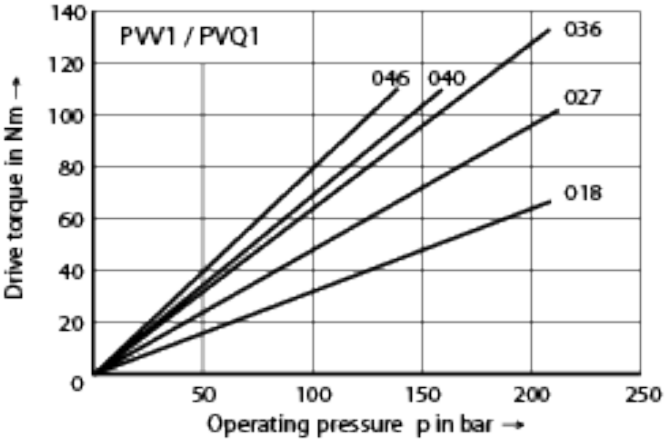

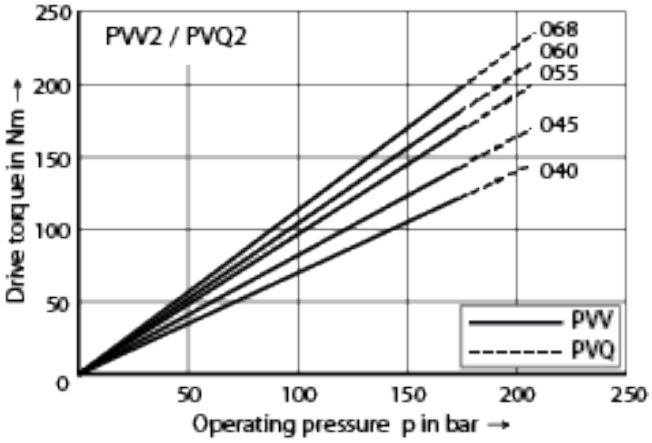

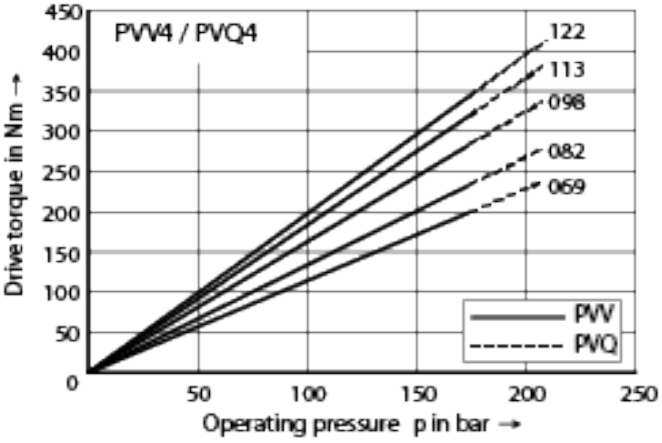

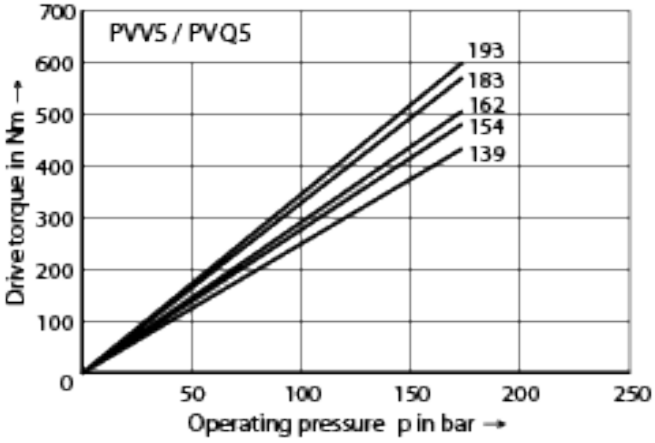

Nosie pressure level measured in a low noise room to DIN 45635 part 26.

Distance of noise sensor to pump = 1 m. $\nu = 41\ mm^2/s$; n = 1500 and $\vartheta = 50\ °C$

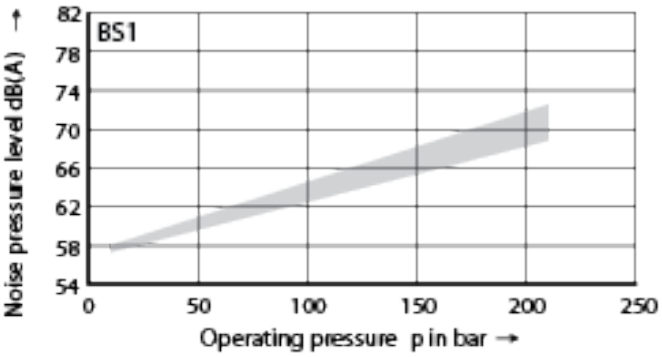

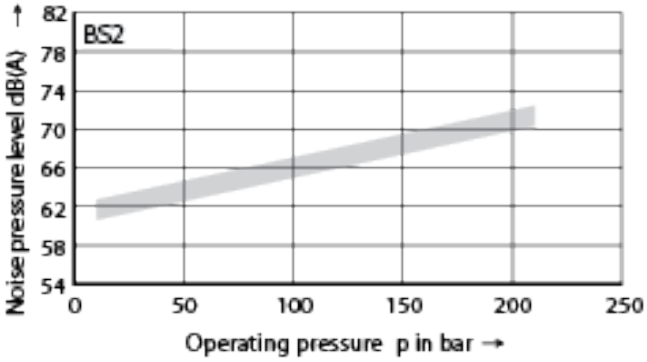

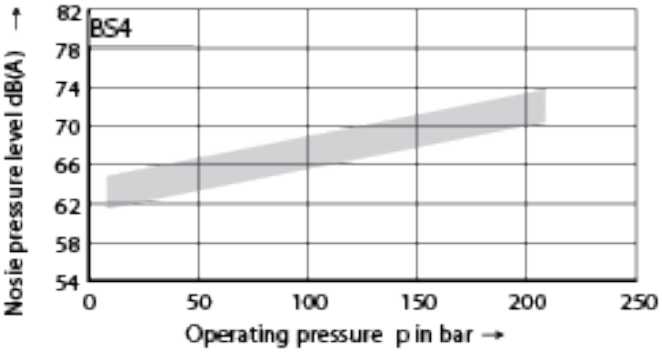

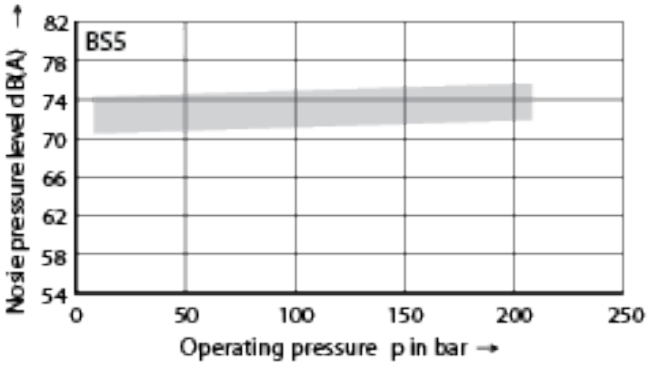

The noise pressure levels for double pumps lie on average 1 to 3 dB(A) above the values for single pumps.

Drive power (measured at $\nu = 41\ mm^2/s$; $\vartheta = 50\ °C$)

n = 1500 min $^{-1}$

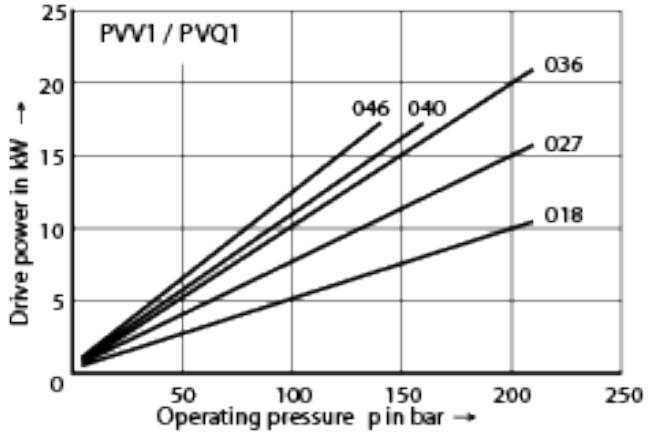

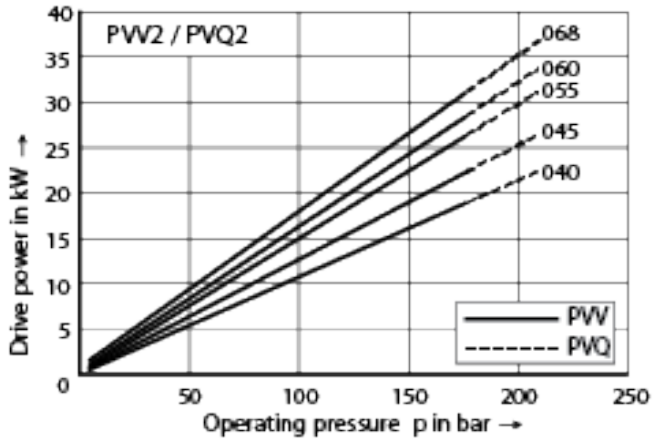

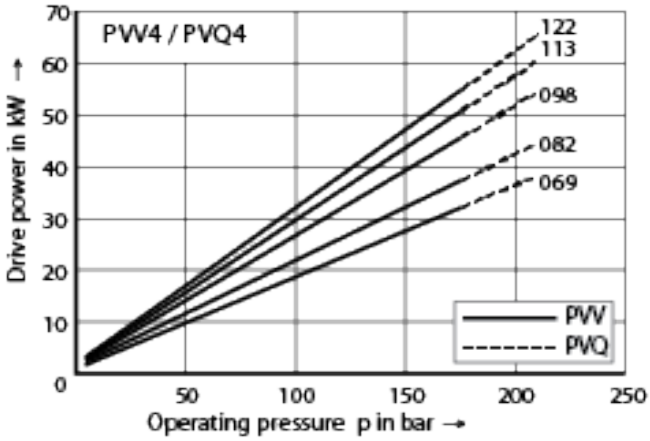

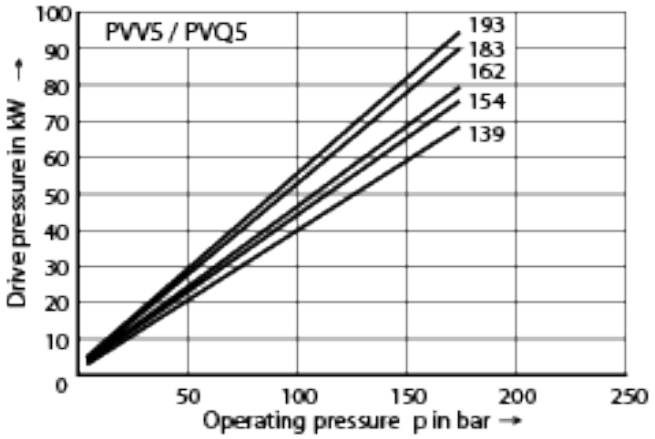

n = 1800 min $^{-1}$

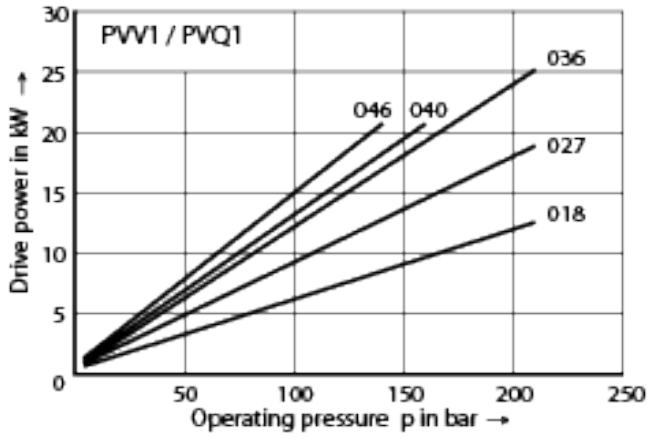

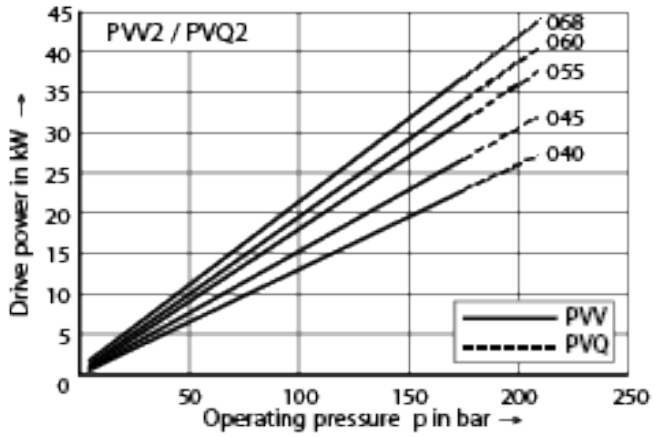

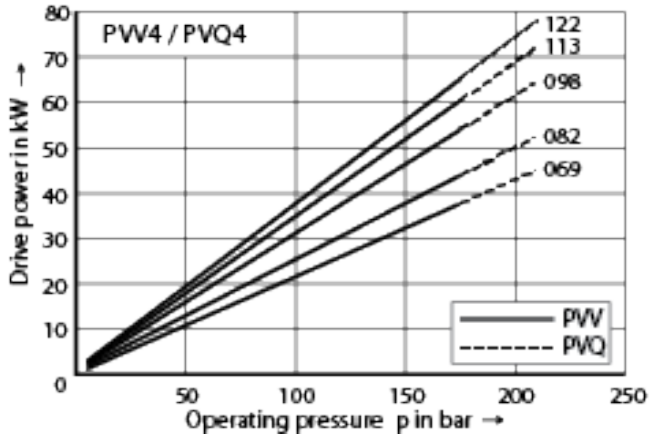

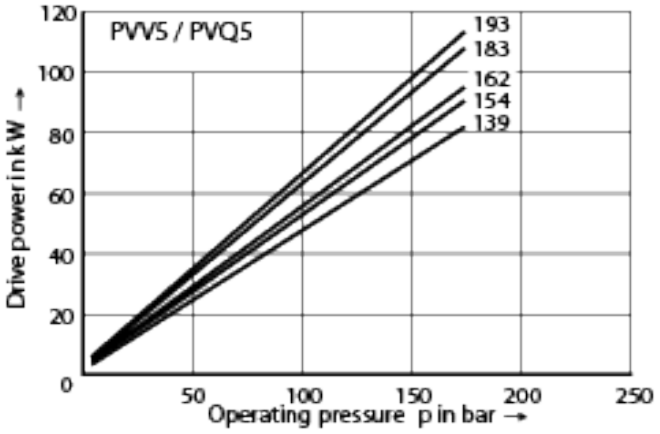

Flow, speed dependent (measured at $\nu = 41$ mm ^{2}/s; $\vartheta = 50$ °C; $p = 7$ bar)

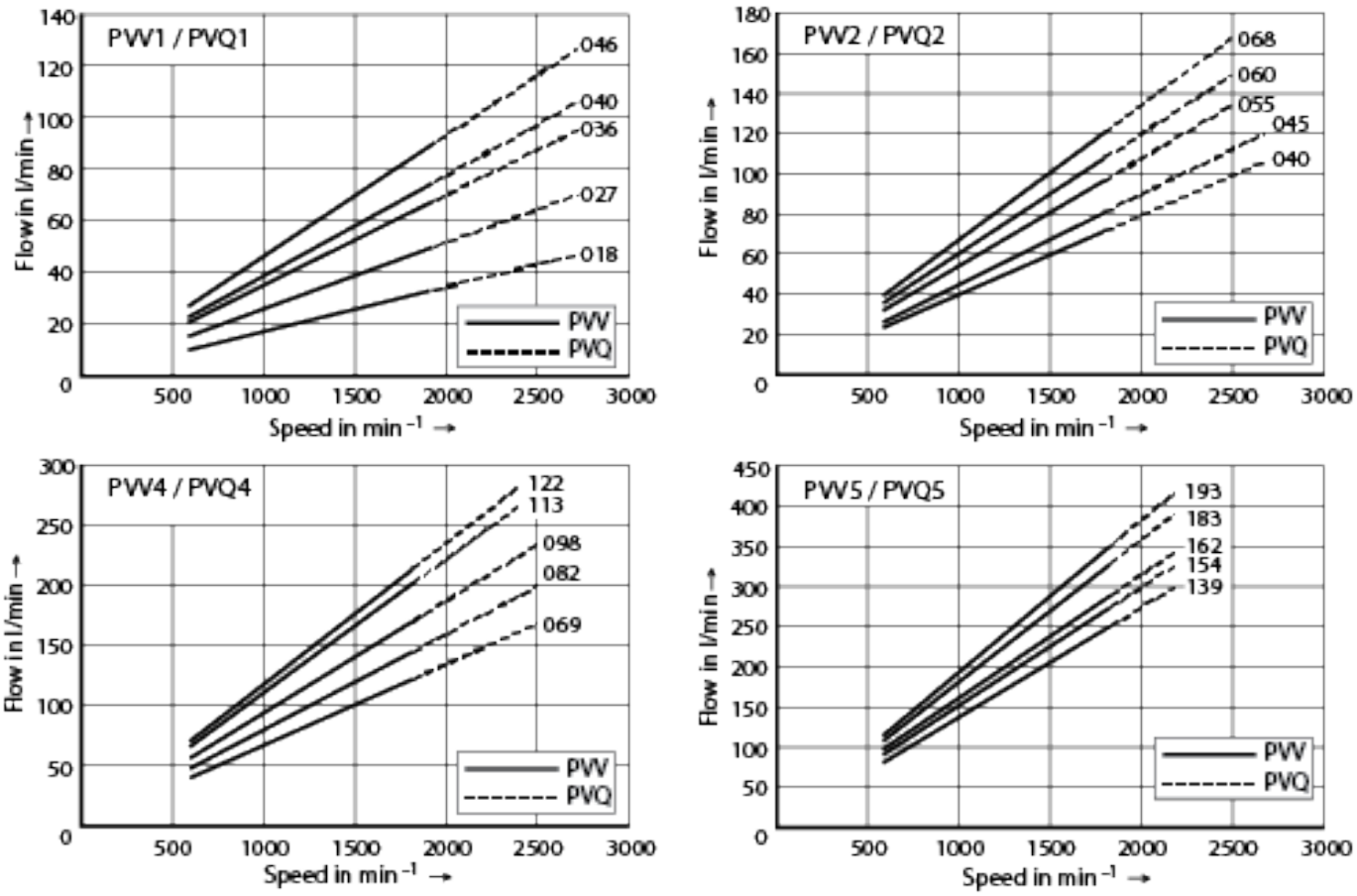

Flow losses, pressure dependent (measured at $\nu = 41$ mm ^{2}/s; $\vartheta = 50$ °C)

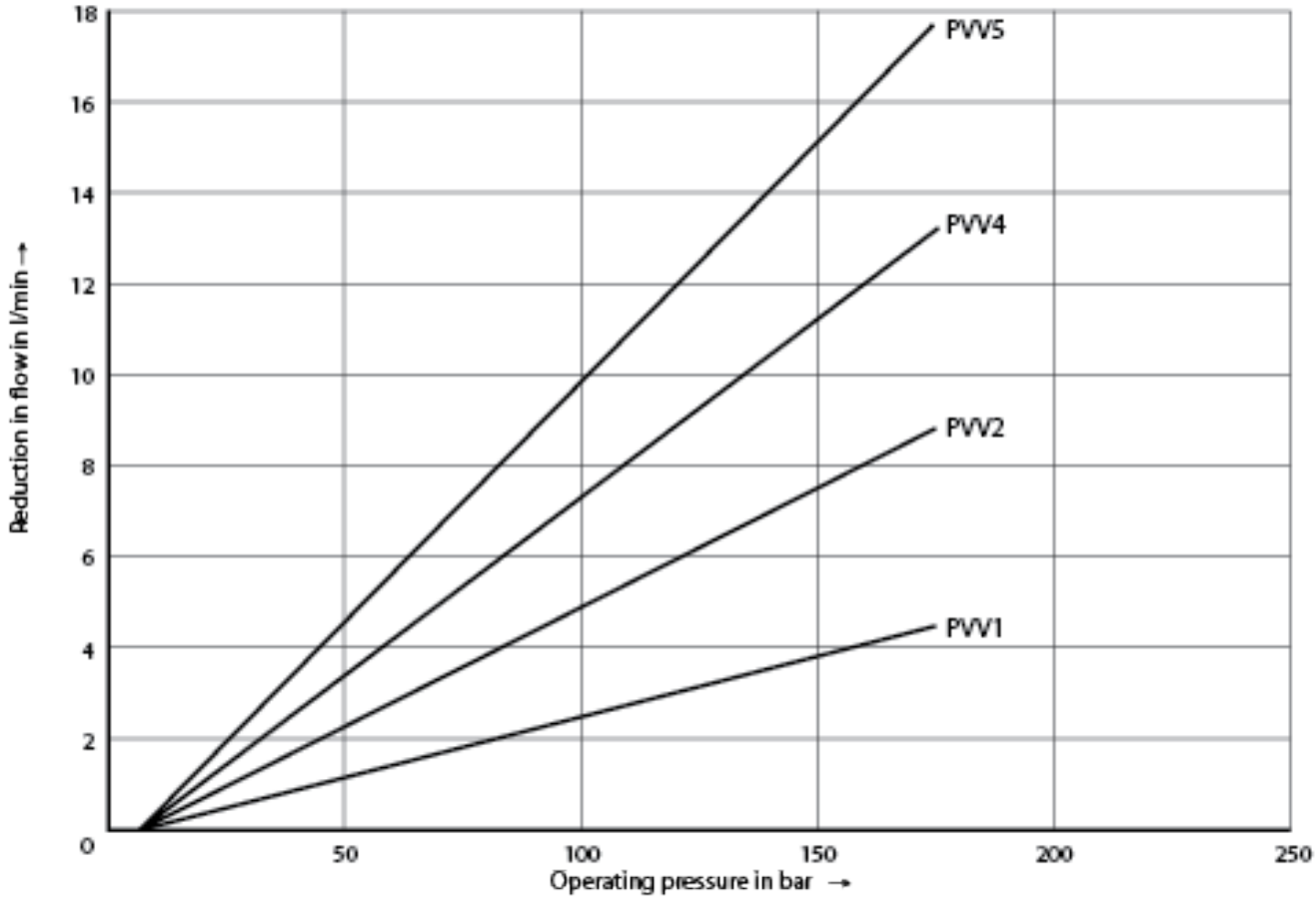

Unit dimensions: single pumps PVV / PVQ, BS1 (nominal dimensions in mm)

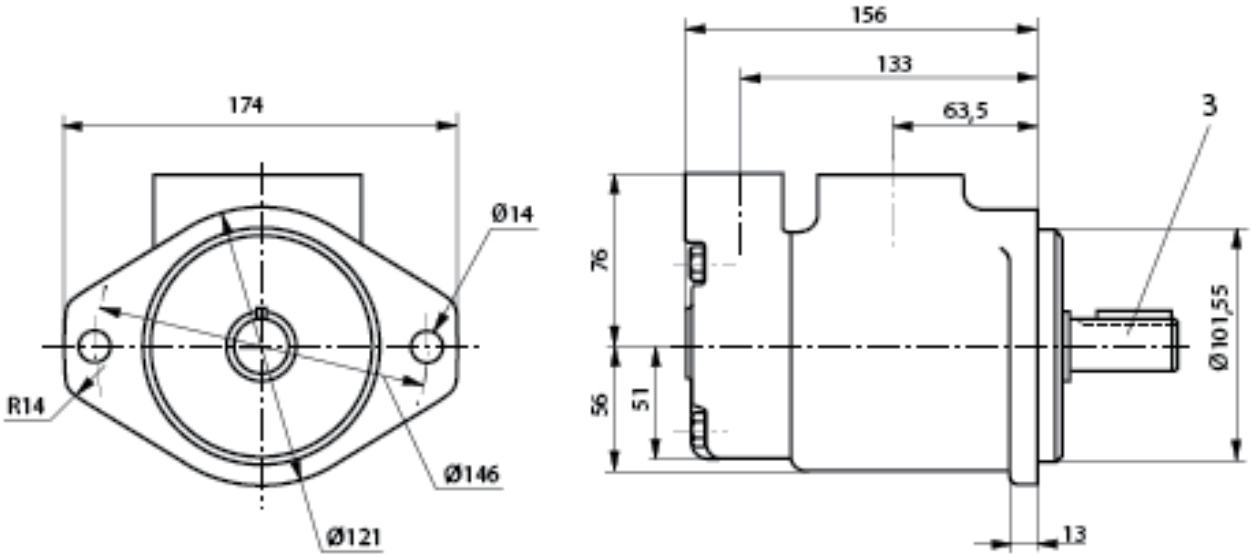

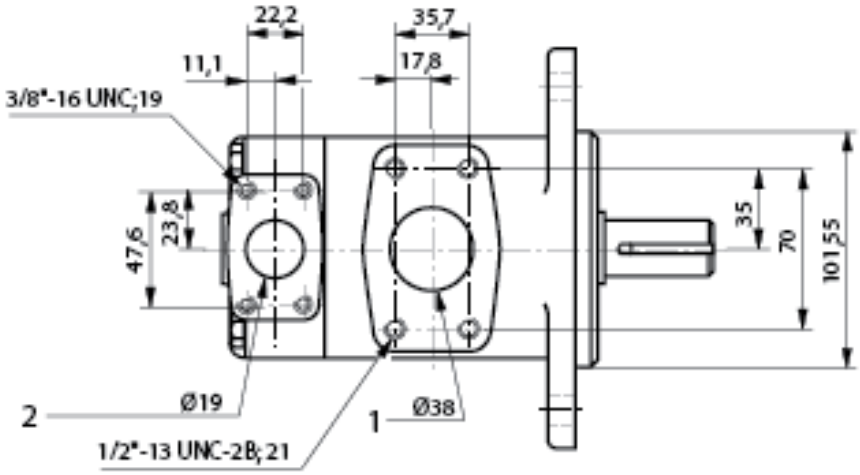

1 Suction connection SAE 1 1/2"
2 Pressure connection SAE 3/4"
3 Cylinderical drive shaft

Shaft for BS1

Version A
Cylinderical drive shaft
(standard)

4 Key □ 4.76 x 31.8

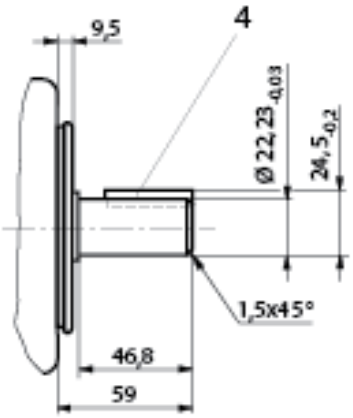

Permissible torque 250 Nm

Version J
Splined drive shaft SAE-B 7/8"
13 teeth 16/32DP
Tooth thickness t = 2.261

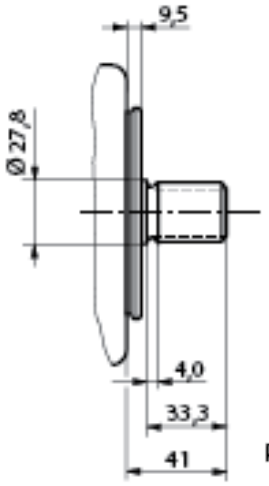

Permissible torque 316 Nm

Unit dimensions: single pumps PVV / PVQ, BS2; 4; 5 (nominal dimensions in mm)

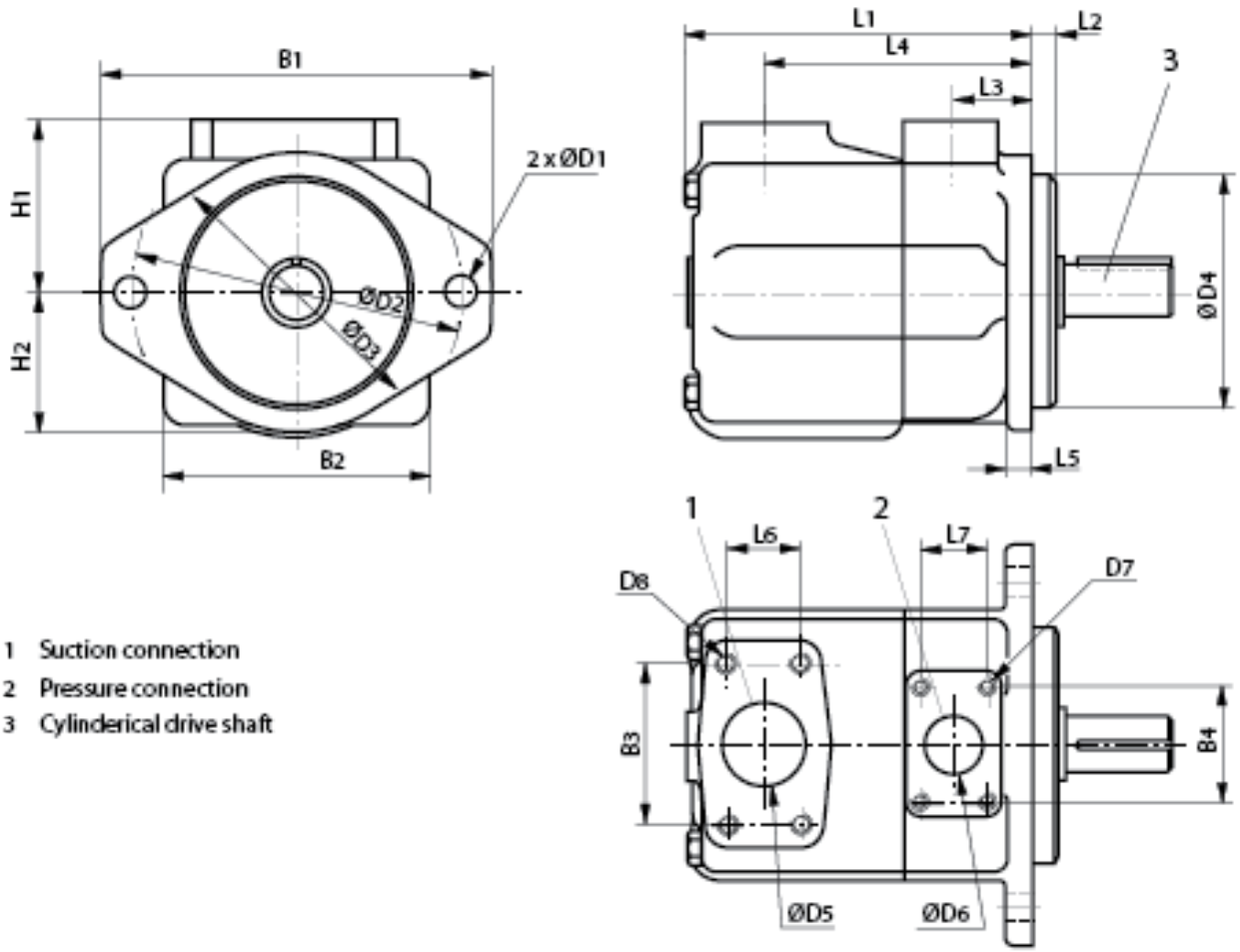

1 Suction connection
2 Pressure connection
3 Cylinderical drive shaft

BS	Suction connection	ØD5	D8 -28	B3	L6	L4	H1
2	SAE 1 1/2"	38	1/2"-13UNC; 22	69,9	35,7	120,6	76,2
4	SAE 2"	50,8	1/2"-13UNC; 23,8	77,7	42,8	125,5	82,6
5	SAE 3"	76,2	5/8"-11UNC; 28,6	106,3	61,9	153,2	93,6

BS	Pressure connection	ØD6	D7 -28	B4	L7	L3
2	SAE 1"	25,4	3/8"-16UNC; 19	52,4	26,2	38,1
4	SAE 1 1/4"	31,8	7/16"-14UNC; 22	58,7	30,1	38,1
5	SAE 1 1/2"	38,1	1/2"-13UNC; 23,8	69,9	35,7	42,9

BS	Mounting flange	B1	ØD1	ØD2	ØD3	ØD4 -0,05	L2	L5	B2	L1	H2
2	SAE-B	174	14	146	121	101,6	9,5	13	117	163	64

Unit dimensions: PVV / PVQ 2…K.. – with through drive (nominal dimensions in mm)

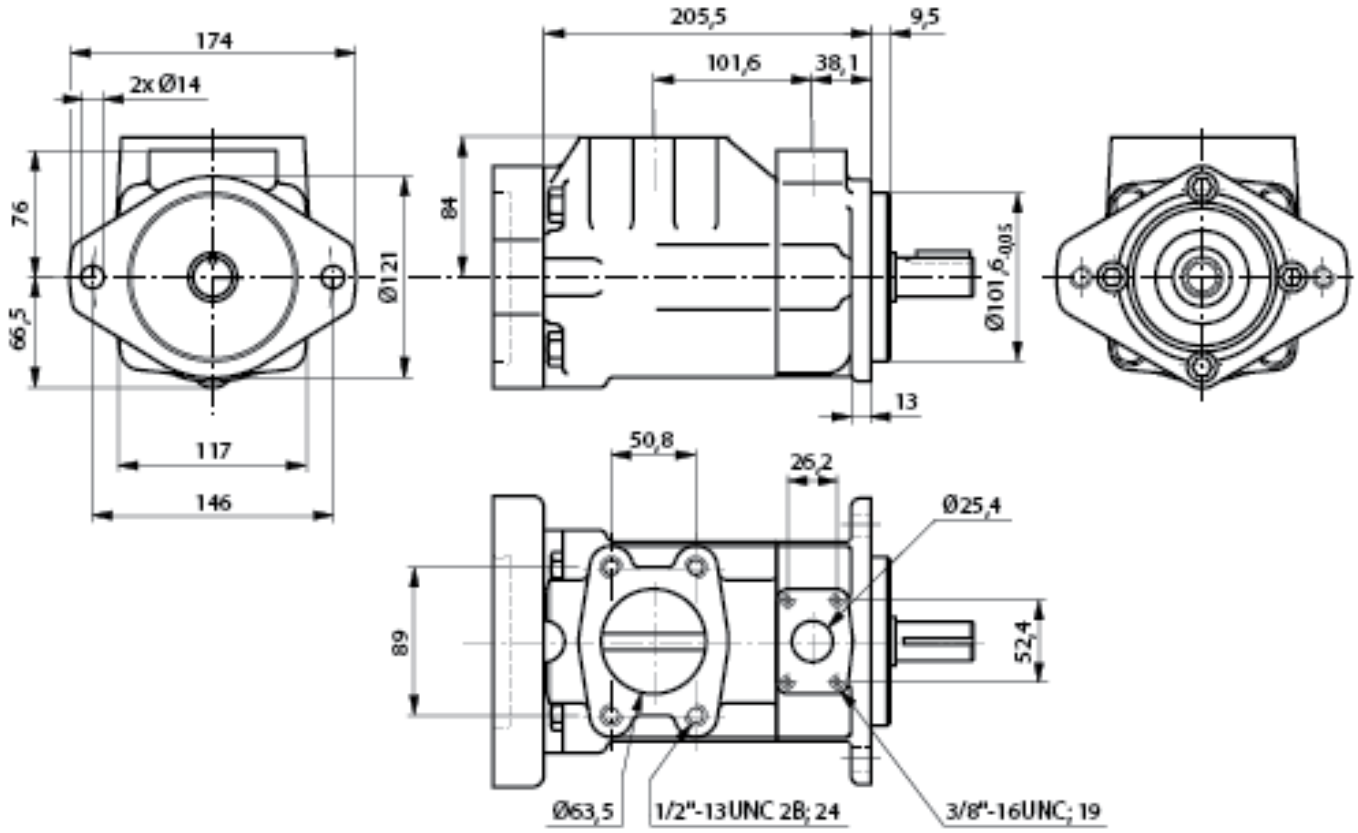

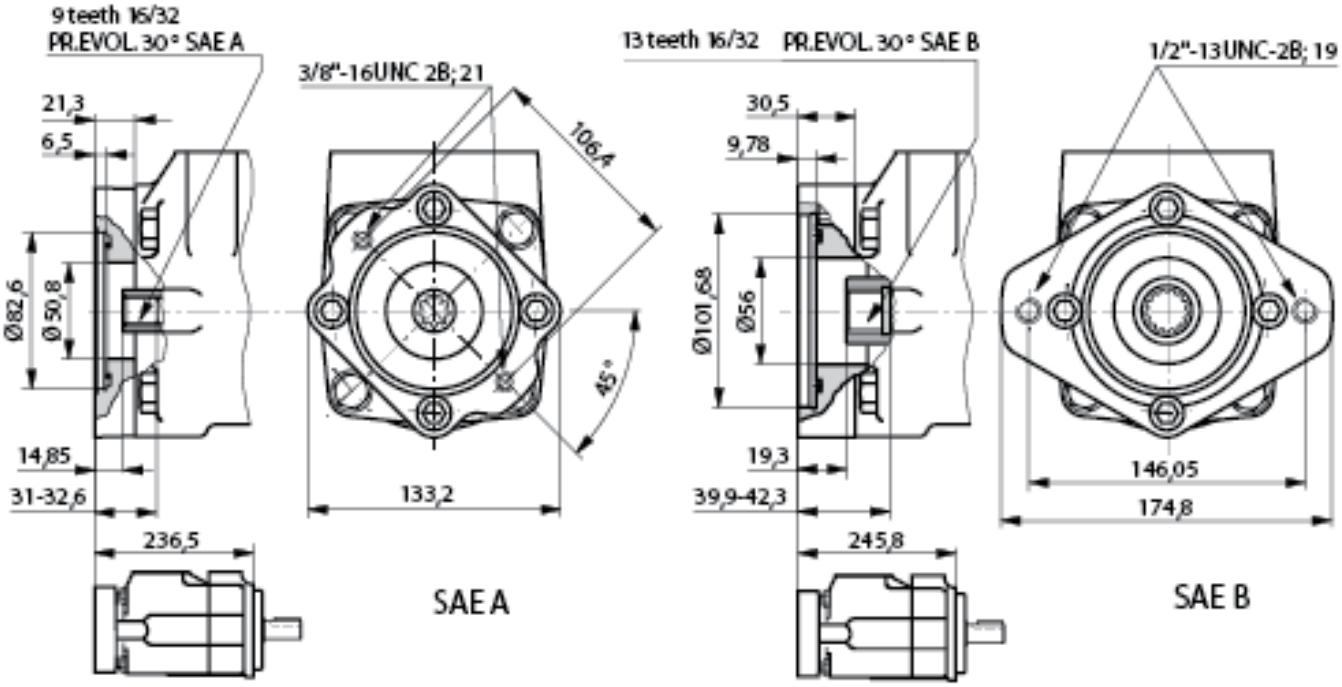

Unit dimensions: PVV / PVQ 4…K.. – with through drive (nominal dimensions in mm)

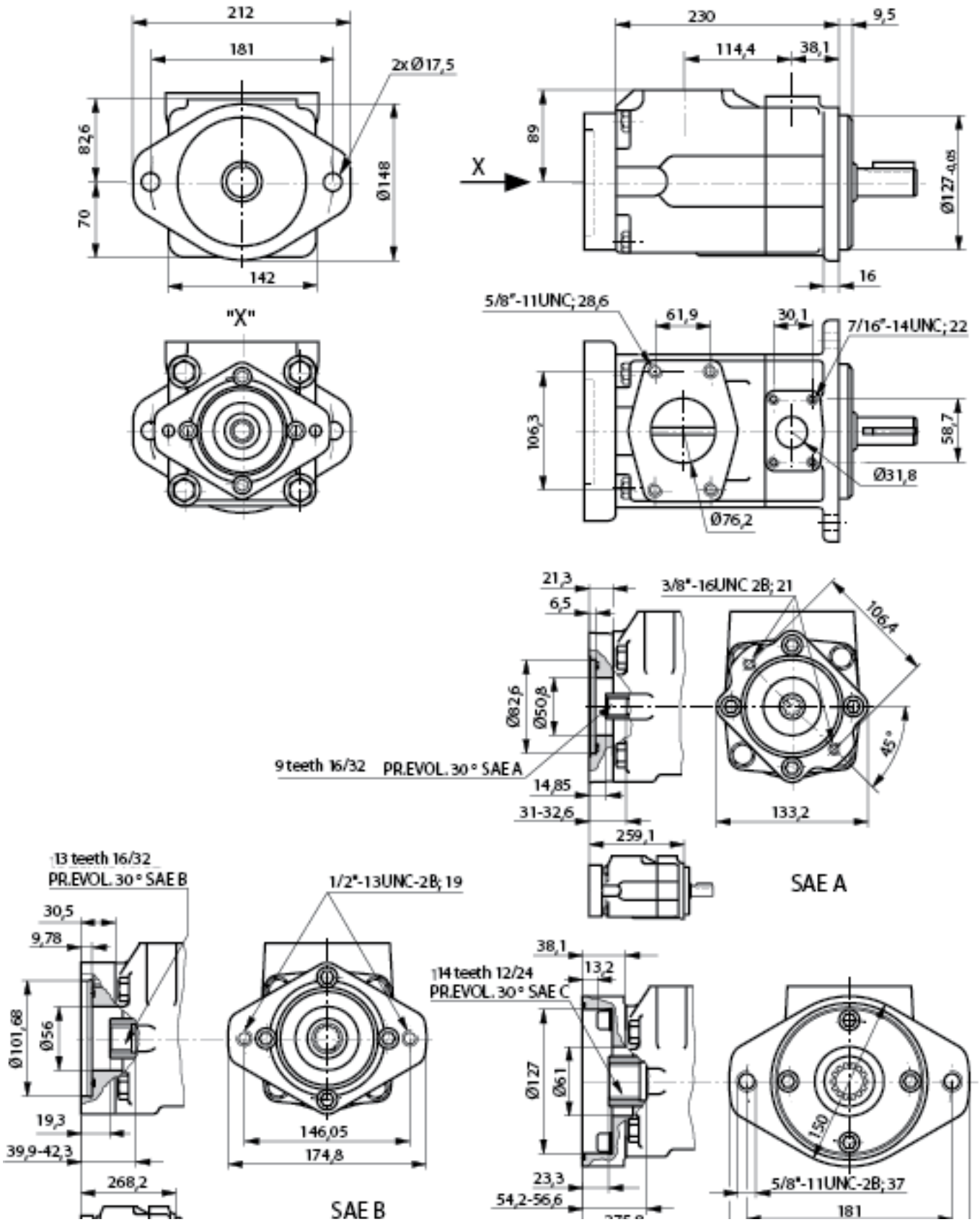

Unit dimensions: PVV / PVQ 5…K.. – with through drive (nominal dimensions in mm)

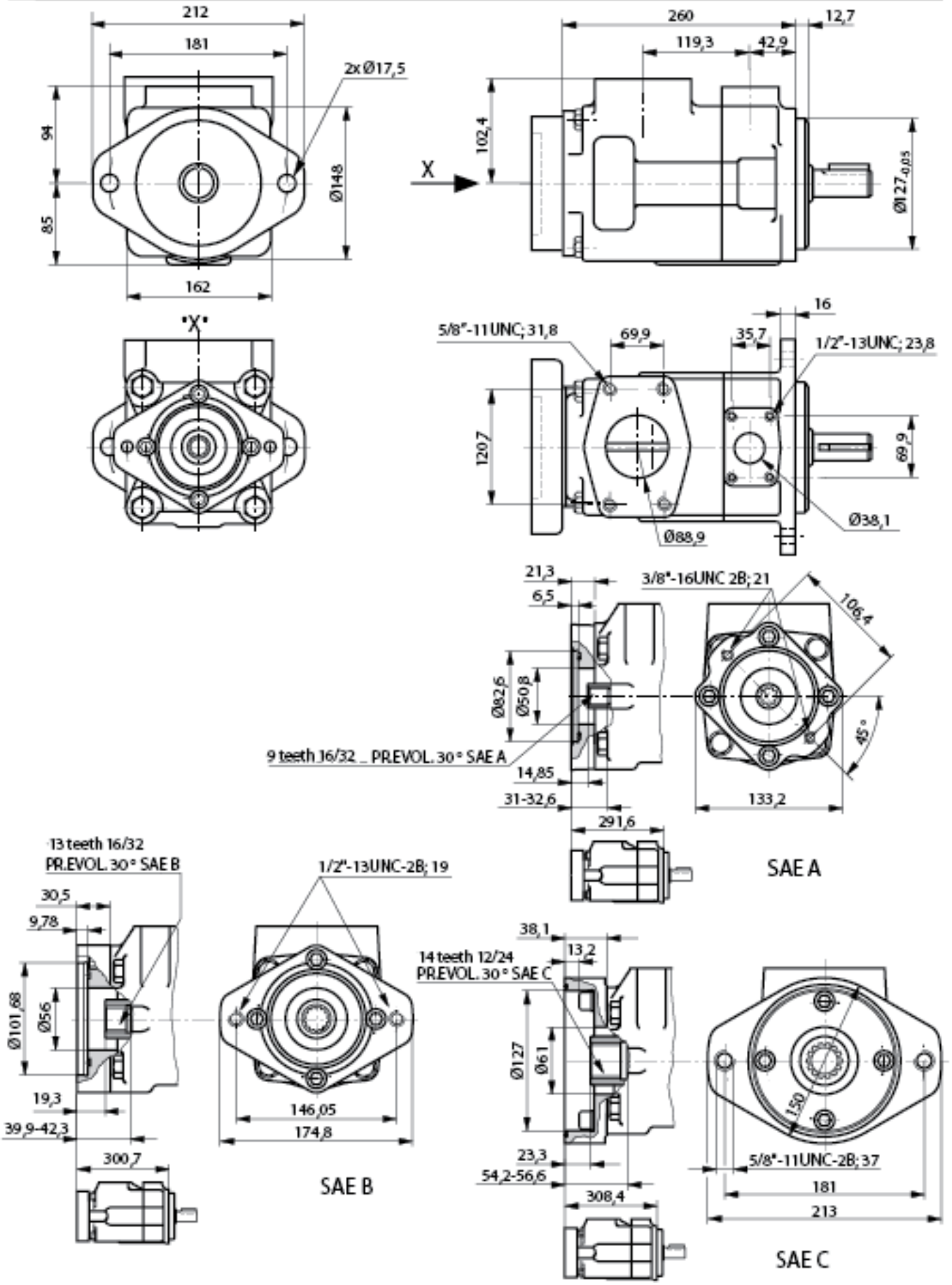

Unit dimensions: double pumps PVV / PVQ, BS21; 41; 42; 51; 52 (nominal dimensions in mm)

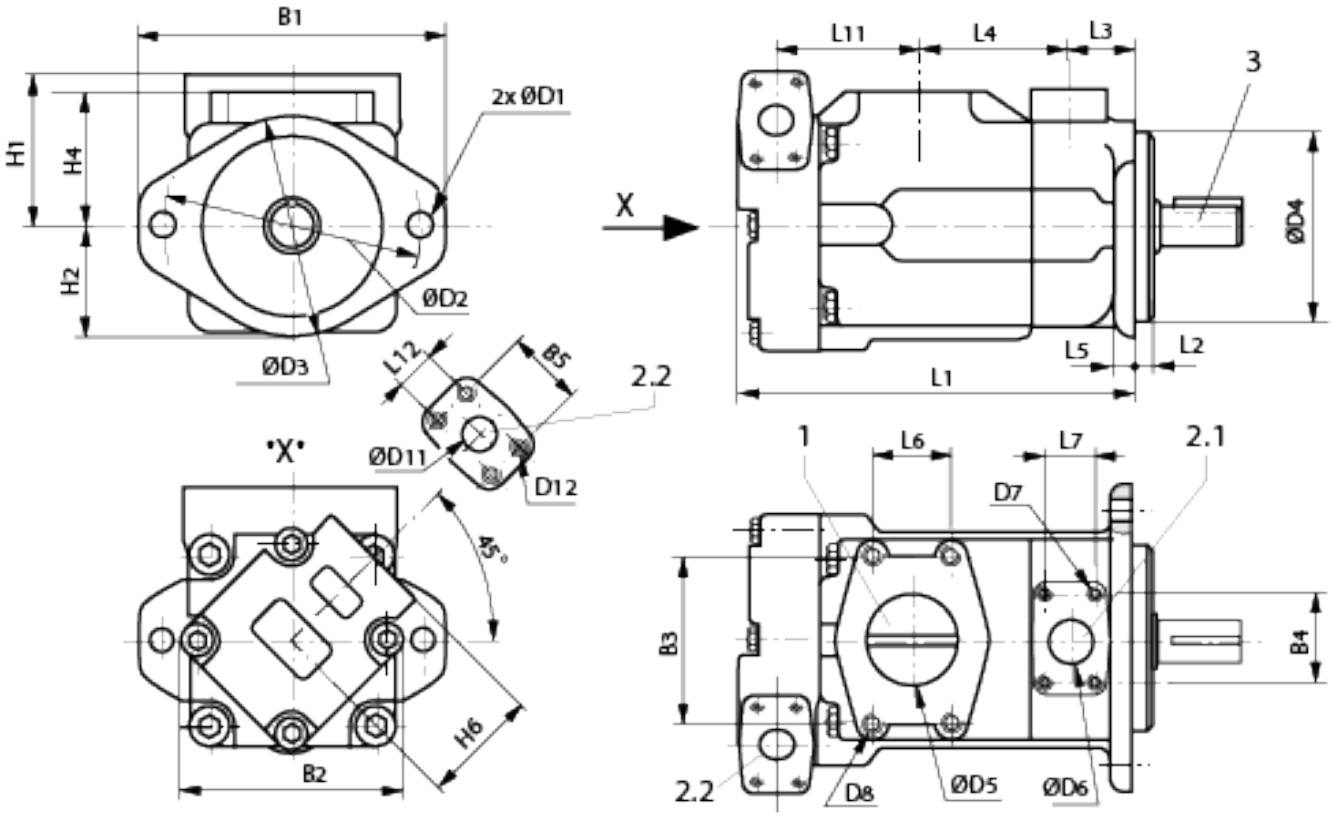

BS	Mounting flange	B1	ØD1	ØD2	ØD3	ØD4 $_{-0,05}$	L2	L5
21	SAE-B	174	14	146	121	101,6	9,5	13
41; 42	SAE-C	212	17,5	181	148	127	9,5	16
51; 52	SAE-C	212	17,5	181	148	127	12.7	16

BS	Suction connection	ØD5	D8 $_{-2B}$	B3	L6	L4	H1
21	SAE 2 1/2"	63,5	1/2"-13UNC; 23,8	88,5	50,8	101,6	84,1
41; 42	SAE 3"	76,2	5/8"-11UNC; 28,6	106,3	61,9	114,4	88,9
51; 52	SAE 3 1/2"	88,9	5/8"-11UNC; 31,8	120,7	69,9	119,3	102,4

BS	Pressure connection - flange side	ØD6	D7 $_{-2B}$	B4	L7	L3	H4
21	SAE 1"	25,4	3/8"-16UNC; 19,1	52,4	26,2	38,1	76,2
41; 42	SAE 1 1/4"	31,8	7/16"-14UNC; 21,6	58,7	30,1	38,1	82,6
51; 52	SAE 1 1/2"	38,1	1/2"-13UNC; 23,8	69,9	35,7	42,9	93,6

BS	Pressue connection - cover side	ØD11	D12 $_{-2B}$	B5	L12	L11	H6	B2	L1	H2
21	SAE 3/4"	19,1	3/8"-16UNC; 19,1	47,6	22,2	88	76,2	132	252	64
41	SAE 3/4"	19,1	3/8"-16UNC; 19,1	47,6	22,2	99,5	74,7	140	275	70

1 Suction connection
2.1 Pressue connection, flange side
2.2 Pressue connection, cover side
3 Cylinderical drive shaft

Unit dimensions: double pumps PVV / PVQ, BS54 (nominal dimensions in mm)

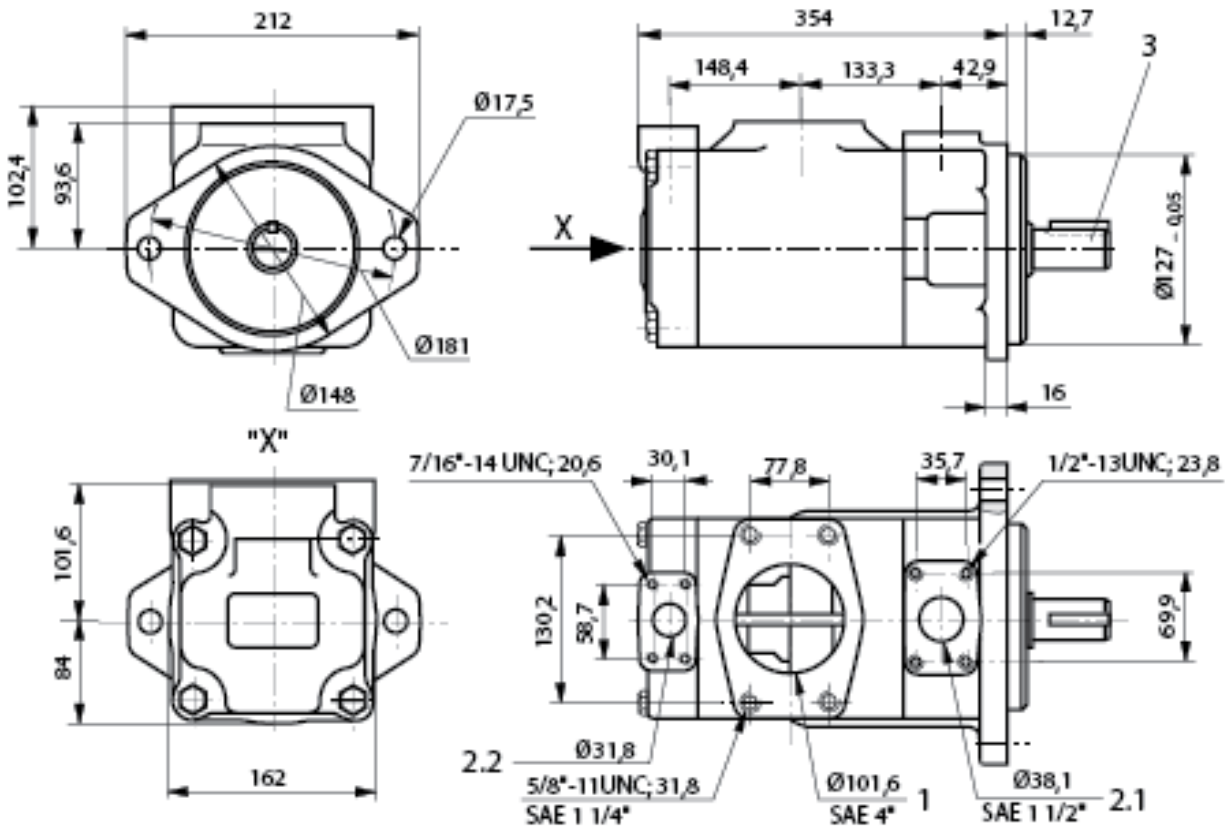

1 Suction connection

2.1 Pressure connection, flange side

2.2 Pressue connection, cover side

3 Cylindrical drive shaft (for drive shaft dimensions see table)

4 Key (for dimensions see table)

Drive shaft for BS2 to 54

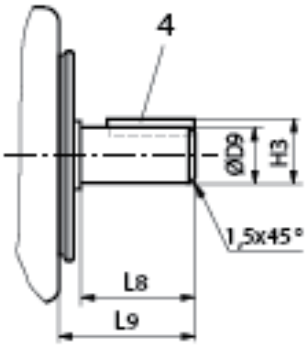

Version A
Cylindrical drive shaft
(standard)

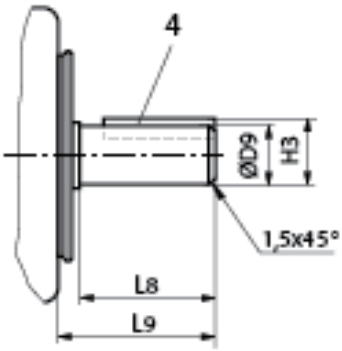

Version B
Cylindrical drive shaft
(strengthened)

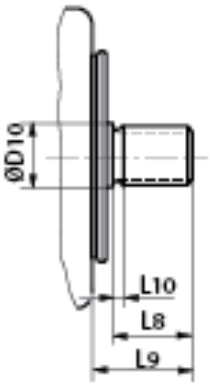

Version J
Splined drive shaft SAE-B or C

Drive shaft version A							Drive shaft version B					
BS	L8	L9	H3	ØD9	Key	T_{max} in Nm	L8	L9	H3	ØD9	Key	T_{max} in Nm
2; 21	46,8	59	$24,5_{-0,2}$	$22,23_{-0,03}$	□ 4,76 x 31,8	250	64	78	$28,3_{-0,2}$	$25,37_{-0,02}$	□ 6,36 x 50,8	400
4; 41; 42	61,9	73,2	$35,2_{-0,3}$	$31,75_{-0,03}$	□ 7,9 x 38,1	407	74,6	86	$38,6_{-0,3}$	$34,9_{-0,03}$	□ 7,9 x 54,6	600
5; 51; 52; 54	47,8	62	$35,2_{-0,3}$	$31,75_{-0,03}$	□ 7,9 x 28,4	610	73	88	$42,37_{-0,23}$	$38,07_{-0,02}$	□ 9,5 x 54,6	810

Drive shaft version J						
BS	L8	L9	L10	ØD10	T_{max} in Nm	Teeth details
2; 21	33,3	41	4,0	27,8	316	SAE-B 7/8", 13 teeth, 16/32 DP
4; 41; 42	42,1	56	3,04	35,05	580	SAE-C 1 1/4", 14 teeth, 12/24 DP
5; 51; 52; 54	46,6	56	9,7	41,28	818	SAE-C 1 1/4", 14 teeth, 12/24 DP

Maximum permissible through drive torques in Nm

	Through drive		
BS	K01 (SAE-A, 9T)	K02 (SAE-B, 13T)	K07 (SAE-C, 14T)
2	131	316	–
4	131	316	437
5	131	384	702

Pump cartridges for PVV / PVQ

Features

- Service friendly due to exchangable pump cartridges
- Within a build size it is possible to change the flow by exchanging the pump cartridges
- The pump can be changed from type PVV to PVQ or PVQ to PVV by changing the cartridges.

Type: CARTRIDGE PVV1-1X

Ordering details

CARTRIDGE	PV		–1X /		

Pump type

Industril version	= V
Mobile version	= Q

Build size 1	= 1
Build size 2	= 2
Build size 4	= 4
Build size 5	= 5

Component series

Component series 10 to 19 (10 to 19: unchanged installation and connection dimensions)	= 1X

No code =	Cartridge for single pumps or flange size for double pumps
D =	Cartridge for cover side installation for double pumps

Direction of rotation

R =	Clockwise
L =	Anti-clockwise

Nominal size / displacement flow

018 =	Build size 1	18,0 cm^3
027 =		27,4 cm^3
036 =		45,4 cm^3
040 =		39,5 cm^3
046 =		45,9 cm^3
040 =	Build size 2	40,1 cm^3
045 =		45,4 cm^3
055 =		55,2 cm^3
060 =		60,0 cm^3
068 =		67,5 cm^3
069 =	Build size 4	69,0 cm^3
082 =		81,6 cm^3
098 =		97,7 cm^3
113 =		112,7 cm^3
122 =		121,6 cm^3
139 =	Build size 5	138,6 cm^3
154 =		153,5 cm^3
162 =		162,2 cm^3
183 =		183,4 cm^3
193 =		193,4 cm^3

ANNOTATIONS :

HUADE AMÉRICA – HAL AUTOMATION
CEP : 03162-020
RUA HIPÓDROMO 1445 – MOOCA, SÃO PAULO, SP, BRASIL
TEL : (11) 3186-5959
huade@huade.com.br
www.huade.com.br